INSTALLATION GUIDE

NCS ZoneCall 16 Kit

Your kit arrives preconfigured: every pendant is registered to the receiver and tested, so there's nothing to program. Mount the receiver, plug it in, and test each room. Then connect a call light or buzzer to each zone's output so staff see and hear every call.

Qty	In the box
16	Single-button pendants with neck cords, numbered 1 to 16
1	16-point receiver with display, power socket fitted
1	12 V plug-in power adapter

You'll also need

- A wall at the staff station, near an outlet that stays on, away from large metal objects.
- A screwdriver, and a drill for the supplied screws and anchors.
- A 12 V call light, strobe or buzzer for each zone, fitted by an electrician or installer (page 3).

Set up in three steps

1 **Mount**
Fix the receiver to the wall at the staff station with the supplied screws and anchors, where staff can see it.

2 **Plug in**
Push the adapter's plug into the receiver's power socket, then plug the adapter into an outlet that stays on. The Power light comes on.

3 **Test**
Press and hold each pendant for one second from every room it will be used in, including bathrooms. Check the receiver shows each call, then reset (page 4).

Know your receiver

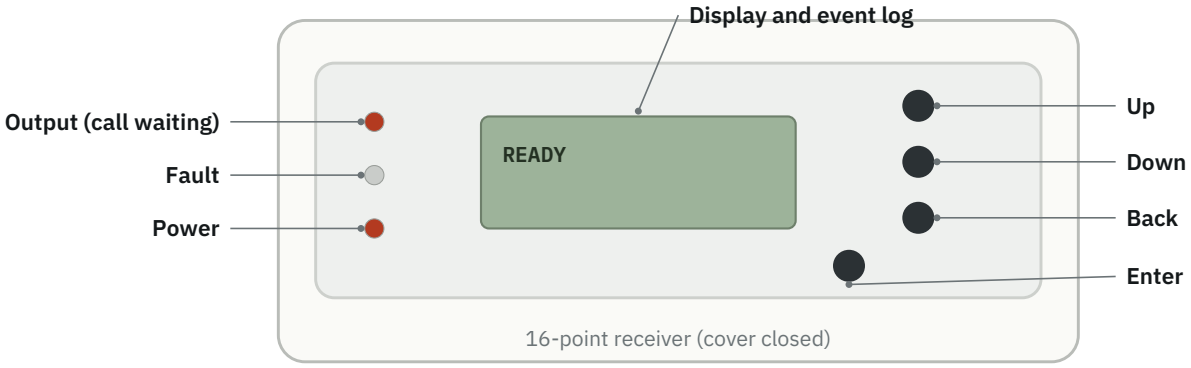

On the receiver	What it tells you
Output light	On while any call is waiting. Stays on until staff reset the receiver.
Fault	Something needs attention. Check the display or event log.
Power	On whenever the receiver has power.
Display and event log	Shows the receiver's status. The event log lists recent calls with the pendant number.
Up, Down, Back, Enter	Open the menu, move through the event log, and return.

Finding who called
Press Enter, choose Event Log, and use Up and Down to read the most recent calls. Press Back to return. The pendant number tells you who to go to.

Add call lights and buzzers

For your electrician or installer. The receiver has a relay output for each zone. When a call comes in, that output switches on and stays on until staff reset the receiver. Connect a 12 V call light, strobe or buzzer to each output so staff see and hear every call, at the staff station, above the zone door, or both.

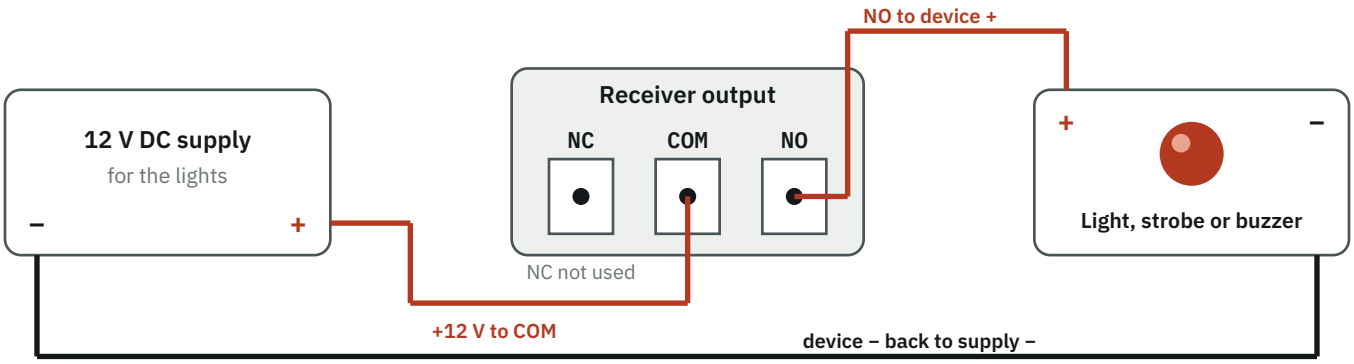

Zone	Pendants	Output
A	1 to 4	Output 1
B	5 to 8	Output 2
C	9 to 12	Output 3
D	13 to 16	Output 4
—	—	Output 5: not used
—	—	Output 6: optional amber light, a pendant needs attention

1 Unplug and open

Unplug the adapter from the outlet and open the receiver cover. The terminal labels NC, COM and NO are printed on the board beside each output.

2 Connect each output

Supply + to COM. NO to the device +. Device – back to supply –. Leave NC empty. Repeat for every output you use.

3 Close, plug in, test

Close the cover without pinching cables, plug the adapter back in, then press every pendant. Its light or buzzer should come on and stay on until you reset.

Ratings

Use 12 V DC devices only; LED lights and piezo buzzers work best. Keep the devices on any one output under 0.5 A (the output is rated 1 A at 28 V DC). Power the devices from their own 12 V DC supply, sized for every device on at once, not from the kit's adapter. Never connect 120 V AC to the receiver.

Using the system

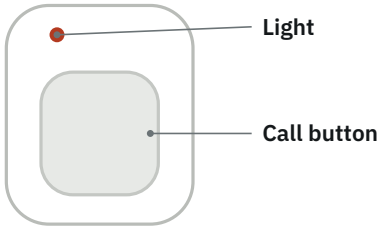

Make a call

Press and hold the pendant button for one second, then let go. The small light on the pendant flashes to show the call was sent.

When a call comes in

The Output light and that zone's call light come on and stay on. Check the event log for the pendant number, match it to your register, and go.

A zone light can mean more than one caller. Check the event log for everyone before you reset.

Clear calls

Reset clears every call at once. Before you reset, make sure every waiting caller has been helped.

1 **Open the cover**
Release the cover tab on the top or bottom edge with a small flat screwdriver and lift the cover. Leave the power on.

2 **Press RESET once**
Press and release the small RESET button inside. Touch only that button.

3 **Close and check**
Close the cover. All call lights go off. Watch for any new call straight away.

> **Tip: a reset button by the receiver**
> Your installer can fit a momentary push button beside the receiver, wired to its reset input and ground, so staff can clear calls without opening the cover.

Care and troubleshooting

Weekly test

Once a week, press every pendant and confirm its call light or buzzer comes on. Then reset.

Pendants

Water-resistant for everyday wear, not for bathing or swimming. When a pendant shows low battery, replace its CR2450 coin cell and test it.

Power cuts

Calls can't be received without power. Keep a backup way to call for help. For backup power, plug the adapter into the battery-backup outlet of a UPS.

What you see	What to do
Power light is off	Check the outlet and the adapter plug. Use your backup way to call for help until power is back.
A pendant's call doesn't show	Test again closer to the receiver. If it still fails, contact us; a larger building may need a repeater.
Fault light is on	Check the display or event log to see what needs attention. If it's a pendant, check it's closed and undamaged, replace its battery if low, then test it.
A zone light doesn't come on	Check the light's 12 V supply and its wiring to that output.
Lights won't go off after reset	Make sure no pendant is still being pressed, then reset again.

Warranty and support

3-year warranty on the pendants and receiver. 1-year warranty on everything else in the kit. Questions or a problem? Email support@nursecallsupply.com or call (805) 555-0142, Monday to Friday, 8 a.m. to 5 p.m. Pacific. Please have your order number ready.

Pendant register

Write each person or room against their pendant number. Keep this beside the receiver.

Pendant	Zone	Person or room	Date issued
1	A		
2	A		
3	A		
4	A		
5	B		
6	B		
7	B		
8	B		
9	C		
10	C		
11	C		
12	C		
13	D		
14	D		
15	D		
16	D		

Receiver label: _____ Installed by: _____ Date: _____